# SHURFLO PROBLASTER™II DELUXE 4.0

MARINE WASHDOWN PUMP – PRODUCT TECHNICAL DATA SHEET

OEM: 4248-163-A09
AFTERMARKET: 4248-163-E09

## APPLICATION:

Marine fresh or salt water wash-down installation. Other uses may include 24V DC pressurize water systems in cabins. This pump may be used for general water transfer.

## PUMP DESIGN:

| | |
|---|---|
| Type: | 4 Chamber Diaphragm pump |
| Ports: | ½”-14 NPSM-Male |
| Liquid: | 130°F [54°C] Max |
| Dry-Prime: | 6 feet [1.82 M] |
| Run Dry: | Yes |
| Inlet Pressure: | 30 PSI Max. [2.06 Bar] |

## ELECTRICAL:

| | |
|---|---|
| Motor: | 24V DC Permanent Magnet, Intermittent Duty. |
| Protection: | Thermal Overload, Automatic Restart |
| Leads: | 14 AWG, 14 ¾” [37 cm] Red +, 15” [38 cm] Black |
| Fuse: | 7.5 Amp Recommended |
| Control: | Shut-Off 60 PSI [4.1 Bar] ± 2 PSI [0.13 Bar] |
| | Re-start 45 PSI [3.1 Bar] ± 2 PSI [0.13 Bar] |

## MATERIALS OF CONSTRUCTION:

| | |
|---|---|
| Housings: | Polypro |
| Valves/Seals: | EPDM |
| Diaphragm: | Santoprene |
| Hardware: | Stainless Steel and Zinc Plated Steel |

## AGENCY APPROVALS:

Ignition Protection 8846, CE, IMCI Certified

## SHIPPING INFORMATION:

| | |
|---|---|
| Net Weight: | 7.9 Pounds [3.5 Kg] ea. |
| Carton Qty.: | 6 |
| Carton Weight: | 50 Lbs. [22.6 Kg] |
| Carton Size: | 24”L X 18”W X 6”H [61cm x 46cm x 15cm] |

## REPAIR KITS

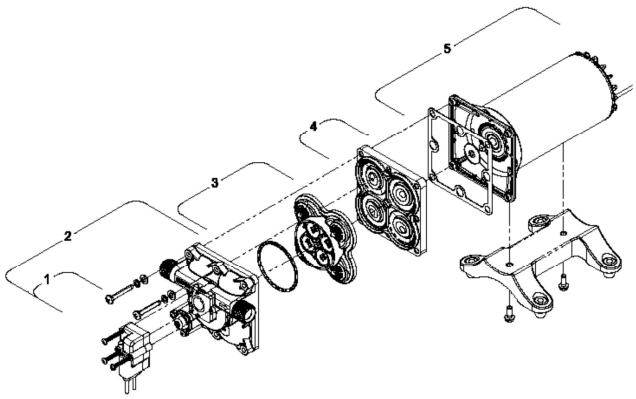


| Number | Description | Part Number |
|---|---|---|
| 1 | Pressure Switch | 94-804-01 |
| 1,2 | Upper Assembly | 94-804-02 |
| 3 | Valve Assembly | 94-800-01 |
| 4 | Drive Assembly | 94-801-02 |
| 5 | Motor/Gasket | 94-71-001-03 |
| 1,2,3,4 | Pump Head | 94-804-03 |
| Not Shown | Check Valve | 94-800-03 |

RELATED DOCUMENTS:

| | |
|---|---|
| Catalog: | MS-030-140 |
| Installation Manual: | 911-1035 |
| Application Spec Guide: | MS-020-005 |

**TYPICAL PERFORMANCE AT 24V**

| PRESSURE | | FLOW | | CURRENT |
|---|---|---|---|---|
| BAR | PSI | GPM | LPM | AMPS |
| 0 | 0 | 4.0 | 15.1 | 1.5 |
| 0.7 | 10 | 3.5 | 13.2 | 2.5 |
| 1.4 | 20 | 3.2 | 12.1 | 3.1 |
| 2.1 | 30 | 3.0 | 11.3 | 3.7 |
| 2.8 | 40 | 2.8 | 10.5 | 4.3 |
| 3.4 | 50 | 2.6 | 9.8 | 4.8 |
| 4.1 | 60 | 2.4 | 9.0 | 5.3 |

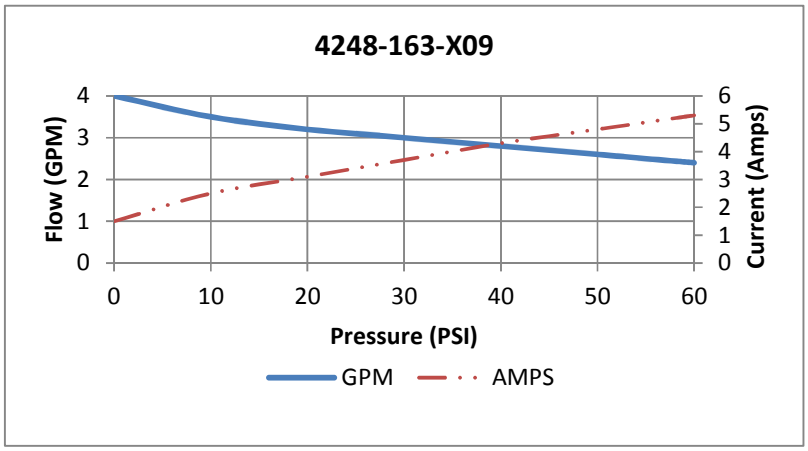


**DIMENSIONS:**

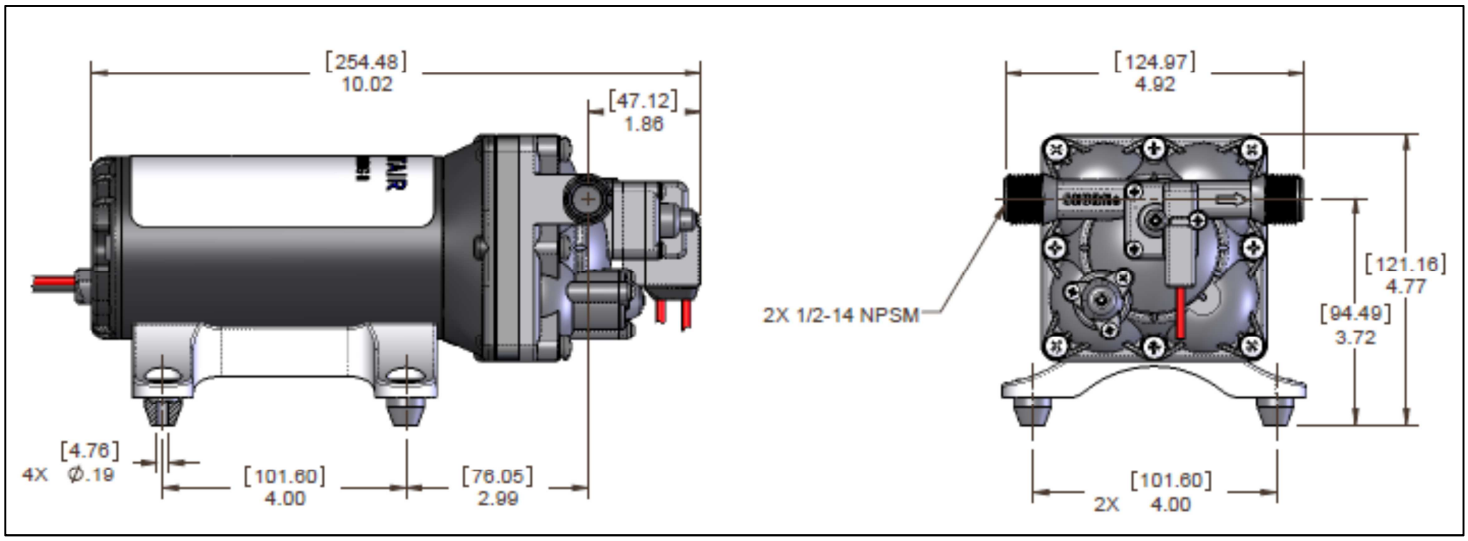


PENTAIR

3545 Harbor Gateway South, Ste. 103, Costa Mesa, CA 92626, (800) 854-3218 www.SHURFLO.com
**SHURFLO Europe, Middle East, Africa**
**Pentair Water Belgium bvba,** Industriepark Wolfstee, Toekomstlaan 30, B-2200 Herentals, Belgium, +32-14-283500

All Pentair trademarks and logos are owned by Pentair, Inc. All other brand or product names are trademarks or registered marks of their respective owners. Because we are continuously improving our products and services, Pentair reserves the right to change specifications without prior notice. Pentair is an equal opportunity employer.

4248-163-A09 (E09) Rev 08/12 ©2012 Pentair, Inc. All rights Reserved.