Product Name #: FPS210S33

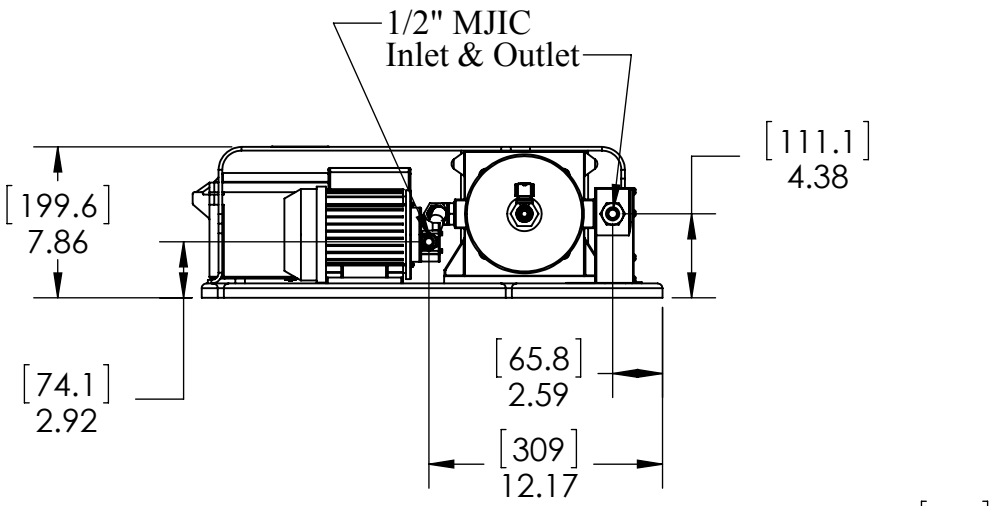

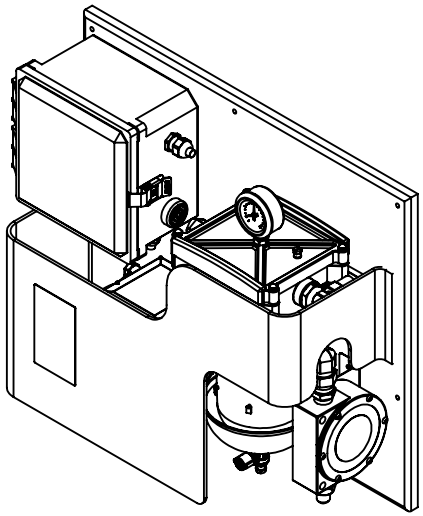

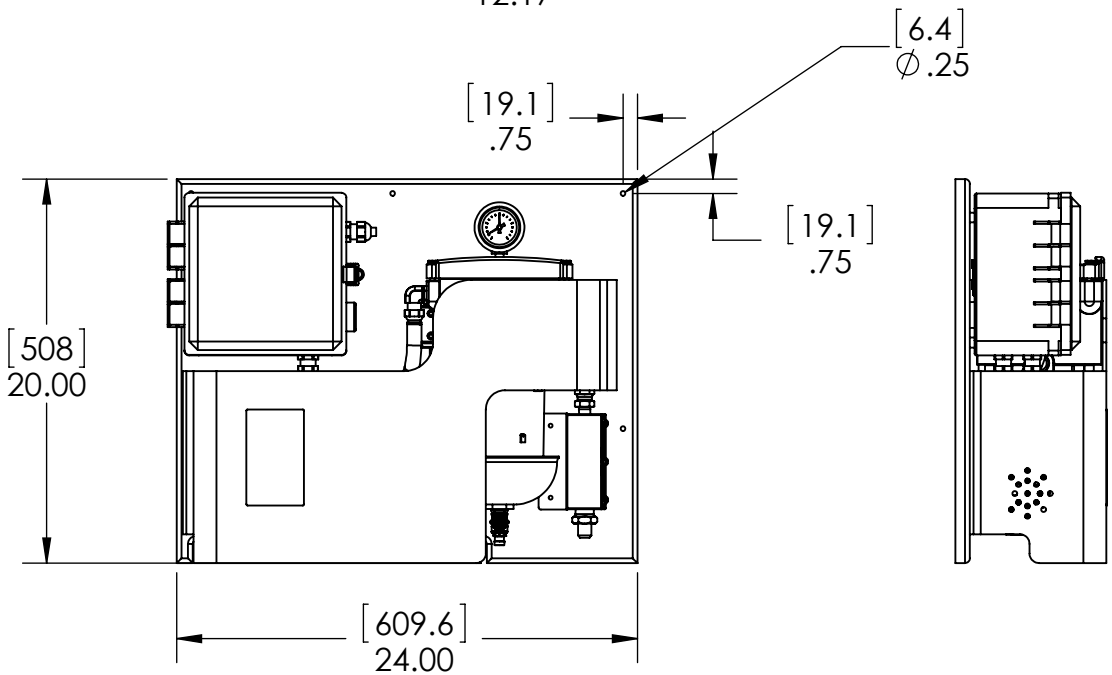

PROPRIETARY AND CONFIDENTIAL

THE INFORMATION CONTAINED IN THIS DRAWING IS THE SOLE PROPERTY OF ***REVERSO PUMPS*** ANY REPRODUCTION IN PART OR AS A WHOLE WITHOUT THE WRITTEN PERMISSION OF ***REVERSO PUMPS*** IS PROHIBITED.

UNLESS OTHERWISE SPECIFIED:

DIMENSIONS ARE IN INCHES

TOLERANCES:

FRACTIONAL ±1/64
ANGULAR: MACH ± BEND ±0.2
TWO PLACE DECIMAL ±.01
THREE PLACE DECIMAL ±.005

COMMENTS:

		NAME	DATE
INTERPRET GEOMETRIC TOLERANCING PER:	DRAWN	JC	4/1/2015
MATERIAL	CHECKED		
FINISH	ENG APPR.		
	MFG APPR.		
DO NOT SCALE DRAWING	Q.A.		

REVERSO

TITLE: Fuel Polishing System - 210 Series - 'S' Class - 220v - 5 AMP - Digital Timer - with Magnetic Fuel Conditioner

SIZE	DWG. NO.	REV
A	FPS210S33-ER-0814	A

SCALE: 1:10 | WEIGHT: | SHEET 1 OF 1

5 4 3 2 1